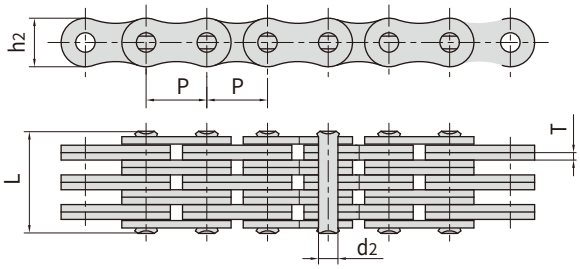
h2
P
P
T
L
d2

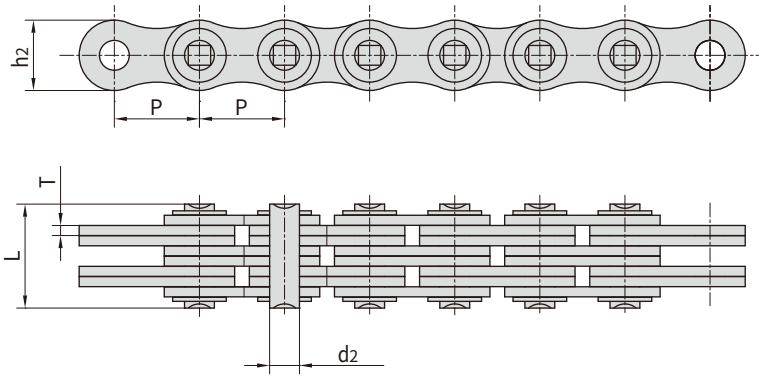

链板组合
Plate lacing

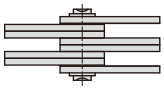

4×4

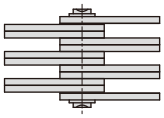

6×6

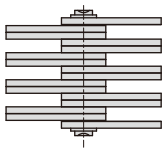

8×8

10×10

	Pitch	Plate lacing	Plate depth		Pin diameter	Pin length		Average tensile strength	Weight per meter
			h				Q min	Q_0	
	mm		mm	mm	mm	mm	kN/lbf	kN	